Supercapacitive operational mode in microbial fuel cell

Supercapacitive Operational Mode in Microbial Fuel Cell

Francesca Soavi[1*], Carlo Santoro[2,3*]

[1] Department of Chemistry "Giacomo Ciamician", Alma Mater Studiorum – Università di Bologna, Via Selmi, 2, 40126 Bologna, Italy

[2] Bristol BioEnergy Centre, Bristol Robotics Laboratory, T-Block, UWE, Coldharbour Lane, Bristol BS16 1QY, UK

[3] School of Chemical Engineering and Analytical Science, The University of Manchester, Oxford Road, Manchester, M13 9PL, United Kingdom

*corresponding author:

Francesca Soavi. francesca.soavi@unibo.it

Carlo Santoro. carlo.santoro830@gmail.com

Abstract

Supercapacitive microbial fuel cells (SC-MFCs) are an emerging and promising field that has captured the attention of scientists in the past few years. This hybridization consists in the integration of supercapacitive features in the MFC electrodes in order to boost the performance output. MFCs provide the red-ox reactions occurring at the two electrodes therefore self-polarizing the electrodes. The electrodes can be discharged galvanostatically and then self-recharged by the red-ox reactions. During the discharge, two main phenomena named electrostatic discharge and faradaic current take place but the separation and quantification of the two contributes seem to be challenging. Galvanostatic discharges produce at least one order of magnitude higher current/power compared to continuous operations making it promising for pulsed type applications.

Keywords: Microbial fuel cells, Supercapacitive, discharges, self-recharges, high power/current generation

Introduction

Microbial fuel cells (MFCs) is a promising biotechnology capable of utilizing organic molecules as fuel for producing electricity [1-2]. At the anode of the MFCs, electroactive bacteria are the (bio)catalyst oxidizing organic matter [1-2]. Different simple and complex organic molecules were degraded in MFCs [3-4]. At the cathode, a reduction reaction occurs where an oxidant is reduced. Usually, oxygen is the most used due to its high red-ox potential and natural availability [5]. Advancements were done in MFC electrodes material for enhancing the biotic/abiotic interface at the anode [6-7] and accelerating the oxygen reduction reaction (ORR) at the cathode [8-9]. The main bottleneck of the MFC technology is the low current/power produced due to the sluggish anodic and cathodic kinetics and not optimal operating conditions [1]. Several strategies have been pursued for enhancing MFC performance. Stacking separate modules in series and/or parallel MFCs were done in order to boost up voltage and current respectively [10-12]. MFC coupled with external storage unit (e.g. capacitors, supercapacitors, battery) or power management systems is another strategy for recovery, store and utilize the energy produced for practical application [13]. A recent review describes the practical energy harvesting techniques and technologies in MFC [13]. Robots were the first successful practical application in which the energy produced by MFC was harvested and used [14-17]. Only very recently, scientists have considered another strategy for boosting up performance following the integration of supercapacitive features into the electrode of MFCs [18-20]. In this review, the working principles of supercapacitive MFCs are discusses. Diverse approaches based on enhancing the output such as increasing the cathode potential or adding a capacitive additional electrode are introduced. Advantages of this hybridization are reported and discussed. The integration of supercapacitive features in MFCs having different designs is presented.

Electrical double layer capacitors (EDLCs)

Electrical double layer capacitors (EDLCs) are energy storage electrochemical systems composed by two electrodes (negative and positive) and a liquid electrolyte [21-22]. The electrodes are externally polarized negatively and positively respectively and

electrolyte counter ions are electrostatically attracted at the electrode surface creating a double layer [21-22]. Once charged, the electrodes can be discharged, electrons accumulated on the electrodes move through the external circuit generating electricity and counter ions are released in the electrolyte [21-22]. The electrodes polarity is reestablished with the external power source. Cycles of discharge/recharge can theoretically occur infinite numbers of time [21-22].

Different than batteries, the energy in EDLC is stored only electrostatically and therefore the energy accumulated is much smaller. The main advantages of EDLC over batteries are: i) much faster charge/discharge; ii) more durability (higher number of charge/discharge cycles); iii) can be charged at any voltage limited only by the electrolyte electrochemical stability [23-24].

Hybridization of supercapacitors with microbial fuel cell

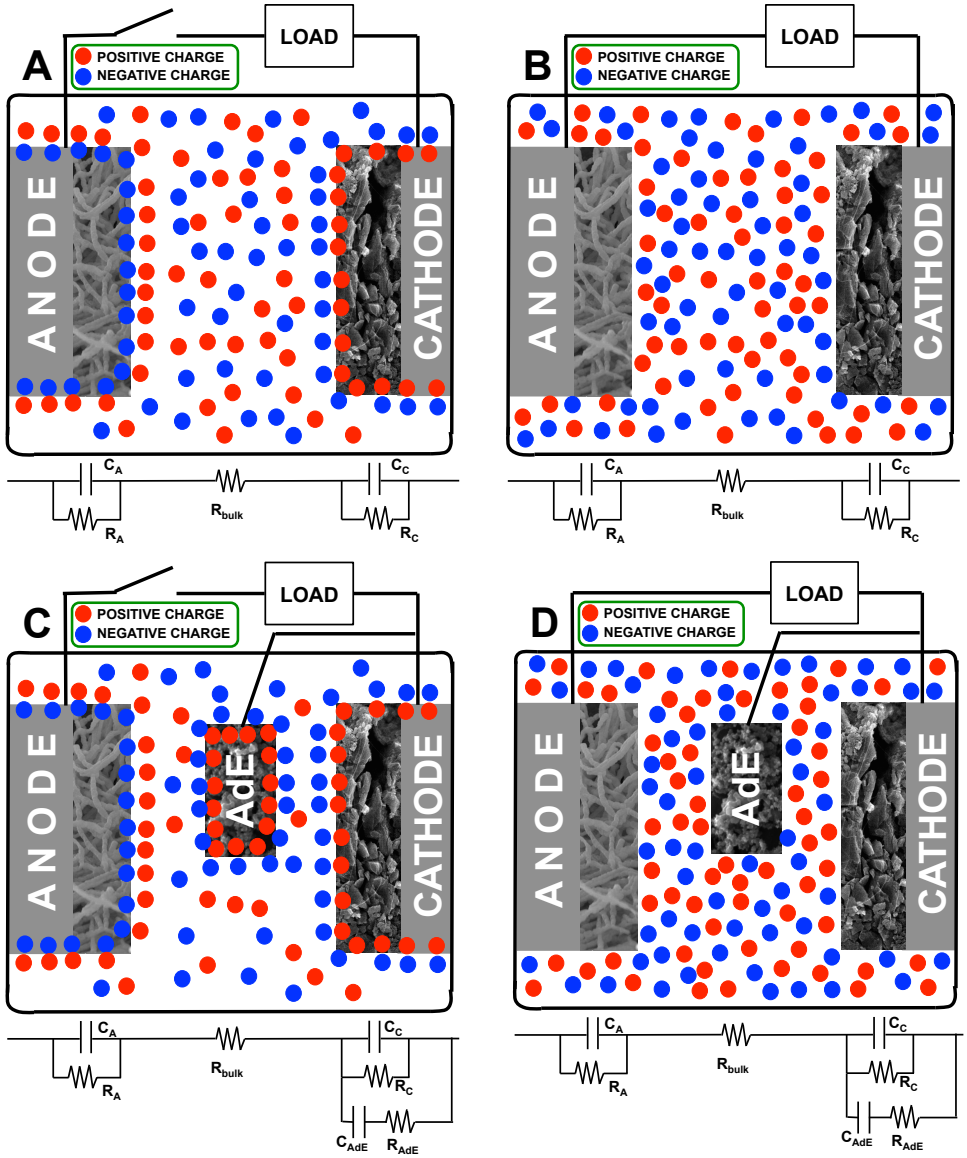

Figure 1. Supercapacitive microbial fuel cell (SC-MFC). While in open circuit, an electrical double layer (EDL) is formed on the anode and the cathode (A). During discharge, the charges on the electrode/electrolyte interface are released in the solution and the circuit is closed (B). SC-MFC with an additional electrode (AdE) short-circuited with the cathode during EDL formation (C). SC-MFC with AdE during galvanostatic discharge (D). In this specific case: $R_{AdE} << R_C$ and $C_{AdE} >> C_C$. Equivalent circuits are drawn under the Figure. Figure adapted from ref. [27], Caizán-Juanarena L, Borsje C, Sleutels T, Yntema D, Santoro C, Ieropoulos I, Soavi F, Ter Heijne A: Combination of bioelectrochemical systems and electrochemical capacitors: Principles, analysis and

opportunities. Biotechnol Adv 2019, 107456, Elsevier, under licence CC BY 4.0 (https://creativecommons.org/licenses/by/4.0/).

Generally, MFCs have carbonaceous electrodes that being of the same materials composition, initially, once inserted in the same abiotic oxygen-free electrolyte have a difference in equilibrium potential of ≈0 mV [21]. Once MFCs are inoculated with activated sludge and connected to an external load, two main environments are created. The anode is colonized by electroactive bacteria that act as biocatalysts for the oxidation reaction. Oxygen is consumed and anaerobic conditions are established [25]. Therefore, the electrode is negatively polarized and the potential moves towards negative values [25]. In parallel, the cathode is exposed to air and oxygen is used for the ORR. The cathode electrode is positively polarized and the potential moves towards positive values [26].

As consequence of these two different established bioelectrochemical environments, the electrodes are polarized (Figure 1A). Electrochemical double layers are therefore set at each electrode/electrolyte interface (Figure 1A). At the cathode surface, the excess of positive charges is balanced by electrolyte anions. In parallel, on the anode surface, the excess of negative charges is counterbalanced by the electrolyte cations (Figure 1A) [27]. Opposite charges moves from the electrolyte to the charged electrodes forming an electrochemical double layer at each electrode/electrolyte interface. In such condition, the cell can be described as a charged EDLC. The anode and cathode of MFCs are behaving like the negative and positive electrode of an internal supercapacitor that can be discharged and thank to the different anaerobic and aerobic environments set at the bio-anode and the oxygen cathode, and to the specific bio-electrochemical environment [27].

Once left in rest conditions and a stable output is reached, the electrodes can be discharged electrostatically, the electrode charges are neutralized and the counterions are released in the electrolyte (Figure 1B). The energy stored electrostatically on the electrodes can then be released to an external load (Figure 1B) [27]. Once the discharge is completed, the electrodes are self-recharged at their initial potential value, self-polarized and an electrochemical double layer is formed on each electrode. The internal EDLC is, therefore self-recharged [27]. Different kind of discharges can be performed. Galvanostatic (GLV) disharges can be run by setting a discharge cut-off voltage (e.g. 0 V) for full discharges, or

by setting the discharge time. In the latter case, the final cell voltage after discharge will depend on the current used for the test. The cells can be also discharged by potential steps, i.e. by measuring the current delivered at given cell voltages. Furthermore, cells can be also discharged by connecting the cell to external loads featuring different impedance values. In our case, we discharged the cells by GLV at different pulse currents and times. We evaluated the maximum power P_{max} performance by the equation: $P_{max}=V_{max}\ I_{pulse}$, where I_{pulse} is the GLV current and V_{max} is the cell voltage immediately after the current pulse. It corresponds to the difference between the initial voltage of the cell in open circuit condition and the ohmic drop related to the internal resistance of the cell.

Electrodes (and cells) feature a capacitive behavior when during galvanostatic discharge the electrode potential (or cell voltage in the case of the full cell) linearly change (decrease for the cell) over time. A true capacitive response requires that the capacitive process is reversible being related to the distribution of charges at the electrical double-layer that is formed at the electrode/electrolyte solution. In the case of supercapacitive MFCs, during galvanostatic discharge different processes overlap: the irreversible faradic reactions driving the MFC operation and the reversible discharge of the electrical double layers. Therefore, even if a linear variation of the cell voltage is detected, this is due to the simultaneous presence faradaic and electrostatic processes. This makes more appropriate to identify the capacitance as "apparent capacitance". Faradaic and electrostatic processes feature diverse rates and kinetics. Typically, the faradic process is slower than the electrostatic one. Hence, apparent capacitance depends on current and pulse time. At the lowest currents and short times the electrostatic process drives the cell response. At the contrary, at low currents and long time the faradic contribution becomes evident.

Results for supercapacitive microbial fuel cell

Introduction of capacitive materials on the anode of MFCs were anticipated in 2012 by scientists from The Netherlands [28] and studies on the same topics were continued

over the years [29-32]. In the same year (2012), Malvankar et al. showed that G. sulfurreducens biofilms through the faradic reactions of the c-type cytochromes produce large specific capacitance (pseudocapacitance) comparable to traditional supercapacitors [33]. In parallel, supercapacitive enzymatic fuel cells were introduced almost simultaneously in France [34] and in Sweden [35]. The first supercapacitive MFC in which both anode and cathode were considered as internal electrodes of a supercapacitor was introduced in 2016 in a joint collaboration between scientists from the University of Bologna (Italy) and the University of New Mexico (USA) [36]. In that study, a membraneless MFC with carbon brush anode and air breathing cathode fabricated with activated carbon (AC) and PTFE, was galvanostatically discharged at different currents (up to 4.5mA). Peak of maximum power (P_{max}) achieved was 0.67mW (2.98Wm^{-2}) [36].

In order to enhance the power output two strategies were adopted: 1) enhance overall potential; 2) utilize a supercapacitive additional electrode. Following the first strategy, with the operation with acetate as substrate, the anode did not suffer of any overpotential. At the contrary, the cathode suffered of significant losses that were quantified in roughly 500 mV and due to activation overpotentials. A way of enhance the cathode potential is the utilization of different catalysts such as Fe-based (Fe-AAPyr) or enzymatic catalysts (bilirubin oxidases, BO_x) with potential shifting from 105mV (vs Ag/AgCl, AC) to 175mV (vs Ag/AgCl, Fe-AAPyr) and further to 315mV (vs Ag/AgCl, BOx) [36]. The enhancement of cathode potential led to much longer discharge time, higher capacitance and increased energy/power produced. In fact, the peak of power produced by supercapacitive MFC with Fe-AAPyr cathode was 0.9mW (4.0Wm^{-2}) and with BO_x cathode was 1.47mW (6.53Wm^{-2}) with an increase of 1.3 and 2.2 times respectively compared to AC cathode MFC [36]. The power was still limited significantly by the high equivalent series resistance (ESR) caused by the cathode ohmic resistance counting for 90% of ESR [36]. The second strategy for increasing performance output was based on overcoming the cathode resistance utilizing an additional electrode (AdE) possessing high capacitive features and low ohmic resistance [36] as presented in Figure 1C and 1D. This AdE was a smaller carbon brush coated with activated carbon for enhancing capacitive features. The AdE was short circuited with the cathode allowing having its same potential and inserted into the liquid electrolyte (Figure 1C and 1D) [36].

With respect to the cathode, the AdE was closer to the anode, therefore diminishing the internal resistance of the cell and, consequently, the ohmic losses. Indeed, the AdE possessed lower resistance and higher capacitance compared to the cathode electrode. Therefore, during discharges, for short pulses, the current mainly flew through the external circuit from the anode to the AdE rather than to the cathode.

Galvanostatic discharges showed improvement in capacitance and substantial decrease in the ESR. This led to a P_{max} generation of 6mW (26.7Wm^{-2}) for AC cathode, 14mW (62.2Wm^{-2}) for Fe-AAPyr cathode and 19mW (84.4Wm^{-2}) for BO_x cathode. These values are 10-100 higher compared to the power peak produced in standard mode operations [36]. Improvements in capacitance and overall performance have also been achieved by introducing graphene within the cathode electrode [37] or with electrospun carbon nanofibers composite cathode [38].

Supercapacitive operations mode was also introduced to other designs of MFCs. Particularly, supercapacitive features were explored for self-stratifying MFC (SS-MFC) in which the red-ox reaction conditions were achieved by the natural self-stratification occurring in the MFC [39]. In these conditions, the bio-anode on the bottom is in anaerobic conditions while the cathode on the top is in anoxic/aerobic conditions. SS-MFC volume was 0.55 mL and the electrodes had an area of 10cm^2 (anode, carbon veil) and 0.8cm^2 (cathode, AC-based cathode) (Figure 2A, 2B). SS-MFC OCV was ≈750mV and the discharges delivered a P_{max} of ≈0.44mW (≈0.79mWml^{-1}) at t_{pulse} of 1s. Once again, the cathode showed having high ESR (≈63Ω), while the anode had low capacitance. In order to overcome those losses, the cathode area was doubled and the anode was doped with AC/PTFE thin layer for increasing the capacitive features. Despite the OCV decreased to ≈630mV, ESR decreased to ≈48Ω, the capacitance increased substantially and the P_{max} increased to ≈0.81mW (≈1.47mWml^{-1}) [39].

Supercapacitive operations have been adopted also in paper-based MFC with an empty volume of 15mL (Figure 2C, 2D). This type of design is easy to build and adopt cheap materials (Figure 2C, 2D) [40]. MFC OCV was quite low (≈475mV) due to the low cathodic performance. Discharges up to 7mA were done and P_{max} of ≈1mW (≈0.07Wm^{-2}) was achieved. Durability tests showed a decrease in performance probably due to the electrolyte evaporation that exposed the anode to aerobic conditions [40].

Supercapacitive operational mode was also explored in the case of 1L ceramic separator MFC box (Figure 2E, 2F) [41]. 28 MFCs composed of ceramic separators, carbon veil anodes and AC/PTFE based cathodes, connected in series were studied. The increase in solution conductivity (CS) leads to a decrease in ohmic losses and enhancement in power output with maximum value of 27.4mW (27.4Wm^{-3}) at 40.1mScm^{-1} [41]. Performance were further increased by the addition of Fe-AAPyr cathode catalysts. P_{max} produced was 36.9mW (36.9Wm^{-3}) at 40.0mScm^{-1} [42].

In order to study the capacitance of the system and discriminate the faradaic contribution from the electrostatic contribution during galvanostatic discharges, MFCs were discharged singularly or in parallel with commercial supercapacitors with constant capacitance [43]. This very recent study shows that MFCs are capable of delivering high current pulses, which are composed by both electrostatic and faradaic contribution. The faradaic contribution is more significant especially at low current [43]. This study brought about the definition of "apparent capacitance" of MFCs

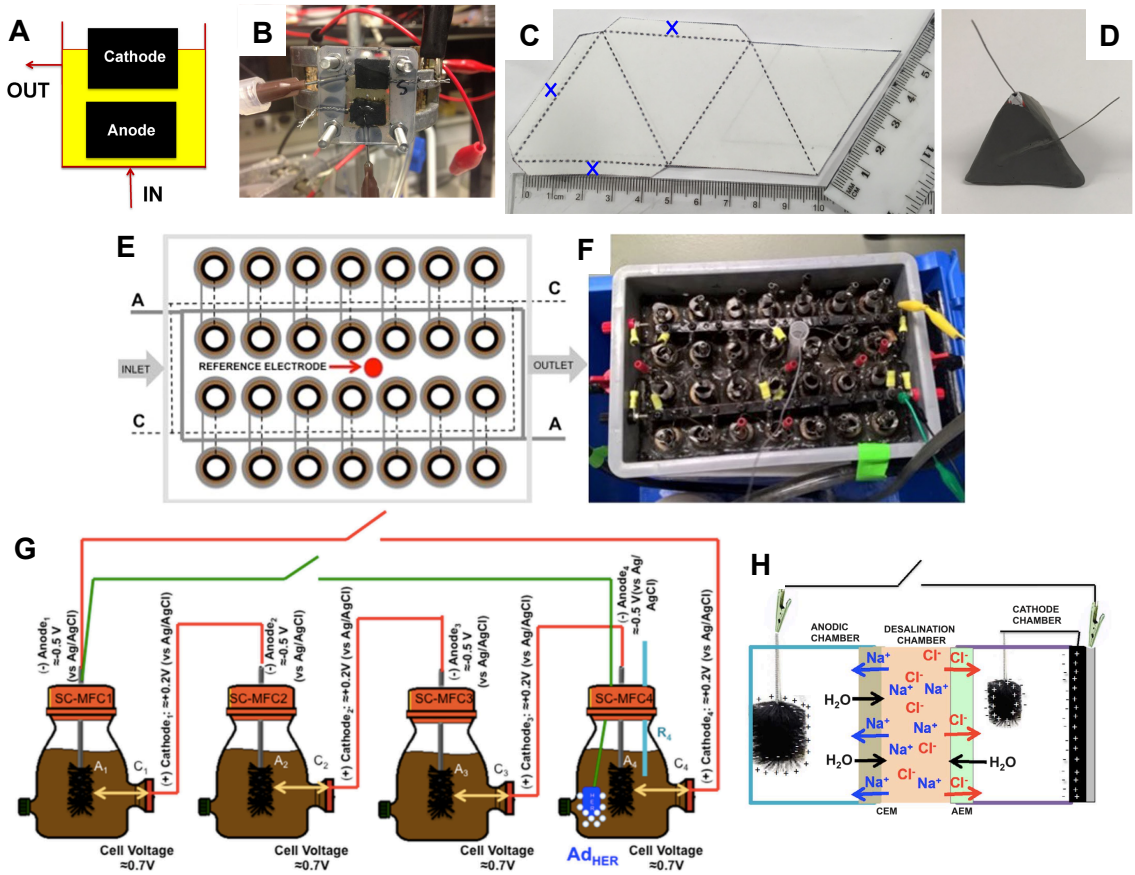

Figure 2. Self-Stratifying supercapacitive MFC (A,B), paper-based supercapacitive MFC (C,D), 1 L ceramic separator supercapacitive MFC (E,F), set up for co-generation of electricity and hydrogen (H), supercapacitive microbial desalination cell (H).
Figure (A and B) adapted from ref. [39], Electrochim Acta 2019, 307: 241-252, Elsevier, under licence CC BY 4.0 (https://creativecommons.org/licenses/by/4.0/). Figure (C and D) adapted from ref. [40], Bioresour Technol Rep 2019, 7: 100297, Elsevier, under licence CC BY 4.0 (https://creativecommons.org/licenses/by/4.0/). Figure (E and F) adapted from ref. [41], Sci Rep 2018, 8: 3281, Nature Springer, under licence CC BY 4.0 (https://creativecommons.org/licenses/by/4.0/). Figure (G) adapted from ref. [18], Electrochim Acta 2016, 220: 672-682, Elsevier, under licence CC BY 4.0 (https://creativecommons.org/licenses/by/4.0/). Figure (H) adapted from ref. [44], Appl Energy 2017, 208: 25-36, Elsevier, under licence CC BY 4.0 (https://creativecommons.org/licenses/by/4.0/).

Supercapacitive MFCs were also used for producing electricity and hydrogen simultaneously [18]. In fact, four single chamber MFCs were connected in series and discharged galvanostatically improving the operating voltage and overall output [18]. An AdE was short-circuited from the anode of the first SC-MFC and inserted in the last SC-MFC. It was shown the possibility of discharging the electrodes of the SC-MFCs and producing hydrogen simultaneously (Figure 2G) [18].

Supercapacitive operational mode was also tested on microbial desalination cell (Figure 2H) [44]. The electrodes were used for electrostatically attract counter ions from the central chamber. This procedure helped increasing the ions transport through the selective membranes and the power produced [44]. As the cathode was the limiting electrode in the system, an AdE was adopted for lowering the ohmic losses and enhances power output (Figure 2H). P_{max} increased from 1.63Wm^{-2} to 3.01Wm^{-2} with the AdE and CS of the desalination chamber decreased by 60-62% after 44h [44].

An historical overview of the results achieved in the past few years is shown in Figure 3.

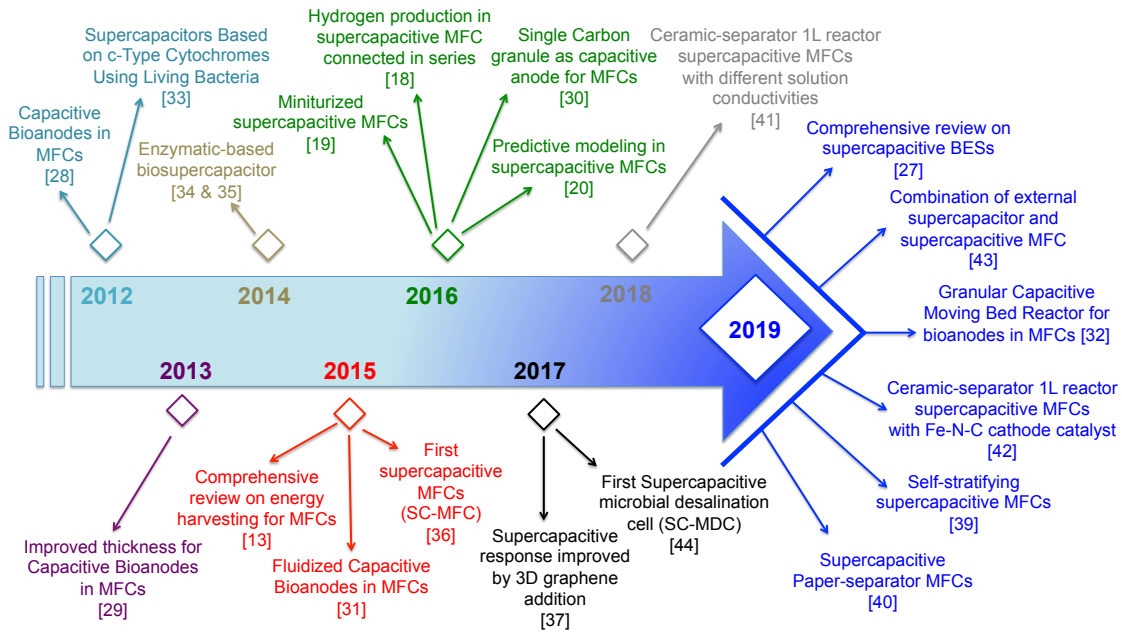

Figure 3. Overview of the milestones achieved in the past few years

Perspective

The consideration of MFC electrodes as the electrodes on an internal supercapacitor is a completely novel way of thinking and operating MFCs. Galvanostatic discharges allow harvesting at least one order of magnitude higher current/power that can be directly used for practical applications. In this way, not only the electrostatically stored charges in the electrochemical double layer are harvested but also during the discharges, reactions occur and therefore part of the current is given by the oxidation of organics (faradaic contribution). As power output of MFCs is a bottleneck, supercapacitive operations allow boosting up pulse power output importantly, despite this occurs in pulsed mode, therefore it can be harvested only during discharge and not continuously limiting the applications to intermittent devices. Improvements in materials and design has to be further explored in the direction of: i) designing bio-compatible electrode materials featuring high electrical double layer capacitance; ii) decreasing the distance between the electrodes without compromising the anaerobic and anoxic/aerobic zones for decreasing the ohmic losses. Scaling up the system is another challenge that has to be overcome by increasing the electrode surface area within the same electrolyte volume.

Acknowledgements

FS acknowledges the Italian Ministry of Foreign Affairs and the Ministry of the Environment, Land and Sea of the Republic of Italy under the Italy - South Africa Research Project (ISARP) 2018-2020 e Progetto di Grande Rilevanza.

References

* of special interest

* * of outstanding interest

*[1] Santoro C, Arbizzani C, Erable B, Ieropoulos I: **Microbial fuel cells: from fundamentals to applications. A review.** *J Power Sources* 2017, **356**: 225-244

This is one of the most recent and complete reviews on microbial fuel cells spacing from fundamental to real applications.

[2] A Rinaldi A, Mecheri B, Garavaglia V, Licoccia S, Di Nardo P, Traversa E: **Engineering materials and biology to boost performance of microbial fuel cells: a critical review.** *Energy Environ Sci* 2008, **1:** 417-429

[3] Pandey P, Shinde VN, Deopurkar RL, Kale SP, Patil SA, Pant D: **Recent advances in the use of different substrates in microbial fuel cells toward wastewater treatment and simultaneous energy recovery.** *Appl Energy* 2016, **168:** 706-723.

[4] Pant D, Van Bogaert G, Diels L, Vanbroekhoven K: **A review of the substrates used in microbial fuel cells (MFCs) for sustainable energy production.** *Bioresour Technol* 2010, **101:** 1533-1543.

[5] Ucar D, Zhang Y, Angelidaki I: **An overview of electron acceptors in microbial fuel cells.** *Frontiers Microbiol* 2017, **8**: 643

[6] Wei J, Liang P, Huang X: **Recent progress in electrodes for microbial fuel cells.** *Bioresour Technol* 2011, **102:** 9335-9344.

[7] Guo K, Prevoteau A, Patil SA, Rabaey K: **Engineering electrodes for microbial electrocatalysis.** *Curr Opin Biotechnol* 2015, **33:** 149-156.

[8] Wang Z, Mahadevan GD, Wu Y, Zhao F: **Progress of air-breathing cathode in microbial fuel cells.** *J Power Sources* 2017, **356:** 245-255.

[9] Yuan H, Hou Y, Abu-Reesh IM, Chen J, He Z: **Oxygen reduction reaction catalysts used in microbial fuel cells for energy-efficient wastewater treatment: a review.** Mater Horiz 2016, **3:** 382-401.

[10] Ieropoulos I, Greenman J, Melhuish C: **Microbial fuel cells based on carbon veil electrodes: stack configuration and scalability.** *Int J Energy Res* 2008, **32:** 1228-1240

*[11] Walter XA, Greenman J, Ieropoulos IA: **Microbial fuel cells directly powering a microcomputer.** *J Power Sources* 2020, **446:** 227328

This work shows for the first time the possibility of powering a microcomputer using a microbial fuel cell without utilizing a power management system.

[12] Gajda I, Stinchcombe A, Merino-Jimenez I, Pasternak G, Sanchez-Herranz D, Greenman J, Ieropoulos I: **Miniaturised ceramic-based microbial fuel cell for efficient power generation from urine and stack development.** *Front Energy Res* 2018, **6:** 84

[13] Wang H, Park JD, Ren ZJ: **Practical energy harvesting for microbial fuel cells: a review.** *Environ Sci Technol* 2015, **49:** 3267-3277

[14] Wilkinson S: **'Gastrobots' - benefits and challenges of microbial fuel cells in food powered robot applications.** Auton Robots 2000, 9: 99-111.

[15] Ieropoulos I, Melhuish C, Greenman J: **Artificial metabolism: towards true energetic autonomy in artificial life.** *European Conference on Artificial Life, ALIFE* 2003, 792

[16] Ieropoulos I, Melhuish C, Greenman J, Horsfield I: **EcoBot-II: An artificial agent with a natural metabolism.** *Int J Adv Robot Syst* 2005, **2:** 295-300

[17] Melhuish C, Ieropoulos I, Greenman J, Horsfield I: **Energetically autonomous robots: Food for thought.** *Auton Rob* 2006, **21:** 187-198

[18] Santoro C, Soavi F, Arbizzani C, Serov A, Kabir S, Carpenter K, Bretschger O, Atanassov P: **Co-generation of hydrogen and power/current pulses from supercapacitive MFCs using novel HER iron-based catalysts.** *Electrochim Acta* 2016, **220:** 672-682

[19] Soavi F, Bettini LG, Piseri P, Milani C, Santoro C, Atanassov P, Arbizzani C: **Miniaturized supercapacitors: key materials and structures towards autonomous and sustainable devices and systems.** *J Power Sources* 2016, **326:** 717-725.

[20] Houghton J, Santoro C, Soavi F, Serov A, Ieropoulos I, Arbizzani C, Atanassov P: **Supercapacitive microbial fuel cell: characterization and analysis for improved charge storage/delivery performance.** Bioresour Technol 2016, **218:** 552-560.

[21] Conway BE, Electrochemical Supercapacitors: Scientific Fundamentals and Technological Applications.Kluwer Academic / Plenum Publishers, New York, 1999.

[22] Béguin F, Presser V, Balducci A, Frackowiak E: **Carbons and Electrolytes for Advanced Supercapacitors.** *Adv Mater* 2014, 26: 2219–2251.

[23] Lin Z, Goikolea E, Balducci A, Naoi K, Taberna PL, Salanne M, Yushin G, Simon P: **Materials for supercapacitors: When Li-ion battery power is not enough.** *Mater Today* 2018, **21:** 419-436.

[24] Miller JR, **Engineering electrochemical capacitor applications.** *J Power Sources* 2016, **326:** 726-735

[25] Grattieri M, Babanova S, Santoro C, Guerrini E, Trasatti SPM, Cristiani P, Bestetti M, Atanassov P: **Enzymatic oxygen microsensor based on bilirubin oxidase applied to microbial fuel cells analysis.** *Electroanalysis* 2015, **27:** 327-335

[26] Kinoshita K, Electrochemical Oxygen Technology, John Wiley & Sons, Chichester, New York, 1992

[27] Caizán-Juanarena L, Borsje C, Sleutels T, Yntema D, Santoro C, Ieropoulos I, Soavi F, Ter Heijne A: **Combination of bioelectrochemical systems and electrochemical capacitors: Principles, analysis and opportunities. *Biotechnol Adv* 2019, 107456

This is the most recent review on the combination of bioelectrochemical systems and supercapacitors. In this work, basic principles and applications are explored and deeply described.

[28] Deeke A, Sleutels THJA, Hamelers HVM, Buisman CJN: **Capacitive Bioanodes Enable Renewable Energy Storage in Microbial Fuel Cells.** *Environ Sci Technol* 2012, **46:** 3554-3560

[29] Deeke A, Sleutels THJA, Ter Heijne A, Hamelers HVM, Buisman CJN: **Influence of the thickness of the capacitive layer on the performance of bioanodes in microbial fuel cells.** *J Power Sources* 2013, **243:** 611-616.

[30] Borsje C, Liu D, Sleutels THJA, Buisman CJN, Ter Heijne A: **Performance of single carbon granules as perspective for larger scale capacitive bioanodes.** *J Power Sources* 2016, **325:** 690-696.

[31] Deeke A, Sleutels THJA, Donkers TFW, Hamelers HVM, Buisman CJN, Ter Heijne A. **Fluidized capacitive bioanode as a novel reactor concept for the microbial fuel cell.** *Environ Sci Technol* 2015, **49:** 1929-1935.

[32] Borsje C, Sleutels T, Saakes M, Buisman CJN, Ter Heijne A. **The Granular Capacitive Moving Bed Reactor for the scale up of bioanodes. *J Chem Technol Biotechnol* 2019, **94:** 2738-2748.

In this work, granular activated carbon is used as capacitive electrodes into a moving bed reactor. It is one of the first attempts in scaling up a capacitive bioelectrochemical system.

[33] Malvankar NS, Mester T, Tuominen MT, Lovley DR: **Supercapacitors Based on c-Type Cytochromes Using Conductive Nanostructured Networks of Living Bacteria.** *ChemPhysChem* 2012, **13:** 463-468

[34] Agnes C, Holzinger M, Le Goff A, Reuillard B, Elouarzaki K, Tingry S, Cosnier S: **Supercapacitor/biofuel cell hybrids based on wired enzymes on carbon nanotube matrices: autonomous reloading after high power pulses in neutral buffered glucose solutions.** *Energy Environ Sci* 2014, **7:** 1884-1888.

[35] Pankratov D, Falkman P, Blum Z, Shleev S: **A hybrid electric power device for simultaneous generation and storage of electric energy.** *Energy Environ Sci* 2014, **7:** 989-93.

[36] Santoro C, Soavi F, Serov A, Arbizzani C, Atanassov P: **Self-powered supercapacitive microbial fuel cell: the ultimate way of boosting and harvesting power.** *Biosens Bioelectron* 2016, **78:** 229-235.

*[37] Santoro C, Kodali M, Kabir S, Soavi F, Serov A, Atanassov P: **Three-dimensional graphene nanosheets as cathode catalysts in standard and supercapacitive microbial fuel cell.** *J Power Sources* 2017, **356:** 371-380

In this work, three-dimensional graphene nanosheets were integrated into the air-breathing cathode of microbial fuel cells. The integration enhanced the oxygen reduction reaction performance and decreased the ohmic resistance. Moreover, apparent capacitance was enhanced with consequent increase in the overall performance.

[38] Cai T, Huang Y, Huang M, Xi Y, Pang D, Zhang W: **Enhancing oxygen reduction reaction of supercapacitor microbial fuel cells with electrospun carbon nanofibers composite cathode.** *Chem Eng J* 2019, **371:** 544-553

[39] Santoro C, Walter XA, Soavi F, Greenman J, Ieropoulos I: **Self-stratified and self-powered micro-supercapacitor integrated into a microbial fuel cell operating in human urine. *Electrochim Acta* 2019, **307:** 241-252

Supercapacitive features were studied in a self-stratifying supercapacitive microbial fuel cell fed with hydrolyzed urine. Smaller operating volume and high surface to volume ratio led to a power generation higher than 1 mW mL^{-1}.

*[40] Santoro C, Winfield J, Theodosiou P, Ieropoulos I: **Supercapacitive paper based microbial fuel cell: High current/power production within a low cost design.** *Bioresour Technol Rep* 2019, **7:** 100297

Paper based supercapacitive microbial fuel cell with volume of 15 mL and fed with hydrolyzed urine were discharged galvanostatically. 1000 cycles of discharges/self-recharges are presented and analyzed.

[41] Santoro C, Flores-Cadengo C, Soavi F, Kodali M, Merino-Jimenez I, Gajda I, Greenman J, Ieropoulos I, Atanassov P: **Ceramic Microbial Fuel Cells Stack: power generation in standard and supercapacitive mode. *Sci Rep* 2018, **8:** 3281.

A box module containing 28 ceramic separator MFCs and with 1 L in volume was discharged galvanostatically. The solution conductivity of the electrolyte was varied between 2.0 mS cm^{-1} and 40.1 $mScm^{-1}$. The increase in solution conductivity led to an enhancement of the electricity produced.

*[42] Santoro C, Kodali M, Shamoon N, Serov A, Soavi F, Merino-Jimenez I, Gajda I, Greenman J, Ieropoulos I, Atanassov P: **Increased power generation in supercapacitive microbial fuel cell stack using FeNC cathode catalyst.** *J Power Sources* 2019, **412:** 416-424

A box module containing 28 ceramic separator MFCs and with 1 L in volume was discharged galvanostatically. In this case, Fe-N-C catalysts were used on the cathode of the MFCs enhancing the open circuit potential and the overall performance.

[43] Poli F, Seri J, Santoro C, Soavi F: **Boosting microbial fuel cells performance by the combination of an external supercapacitor: an electrochemical study. *ChemElectroChem.* DOI: 10.1002/celc.201901876

A microbial fuel cell and three different commercial supercapacitors were discharged singularly and then combined. This work underlines the electrostatic and faradaic contribution of the microbial fuel cell. At low current, the faradaic contribution of the MFC is evident. A correct operation mode of MFC and SC is necessary for improving and maximizing the performance of every single unit.

[44] Santoro C, Abad FB, Serov A, Kodali M, Howe KJ, Soavi F, Atanassov P: **Supercapacitive microbial desalination cells: new class of power generating devices for reduction of salinity content. *Appl Energy* 2017, **208:** 25-36

Supercapacitive features were investigated for the first time in a microbial desalination cell. In this work, power pulses were performed through galvanostatic discharges and desalination was monitored over time.